NOTES:
1. BOX SIZE
   a. L = 1265mm
   b. H = 550mm
   c. W = 690mm
2. BOX UNIT GROSS WEIGHT: 174.2 lbs / 79 kg
3. NET WEIGHT: 123.5 lbs / 56 kg
4. LABEL INFORMATION (4 PLACES)
   a. MODEL: SPINNAKER
   b. SKU: 160002
   c. SERIAL NUMBER: 160002DAYYMM0001
   d. COUNTRY OF ORIGIN: MADE IN CHINA
5. PRIMARY SERIAL LABEL INFORMATION
   a. SKU: 160002
   b. SERIAL NUMBER: 160002DAYYMM0001
   c. MFG DATE: DAYYMM
   d. PHASE: N/A
   e. CYCLES: N/A
   f. WATTS: N/A
   g. VOLTS/AMPS: N/A
   h. TYPE: N/A
   i. CERTIFICATIONS: CSA / CE
6. COLOR DESIGNATION PER-XX SPECIFIED IN SOP 620-8222
UNLESS OTHERWISE NOTED

REVISION HISTORY

REV	DATE	DESCRIPTION	ECO	BY
A	12/19/2013	PRODUCTION RELEASE.	14455	VC

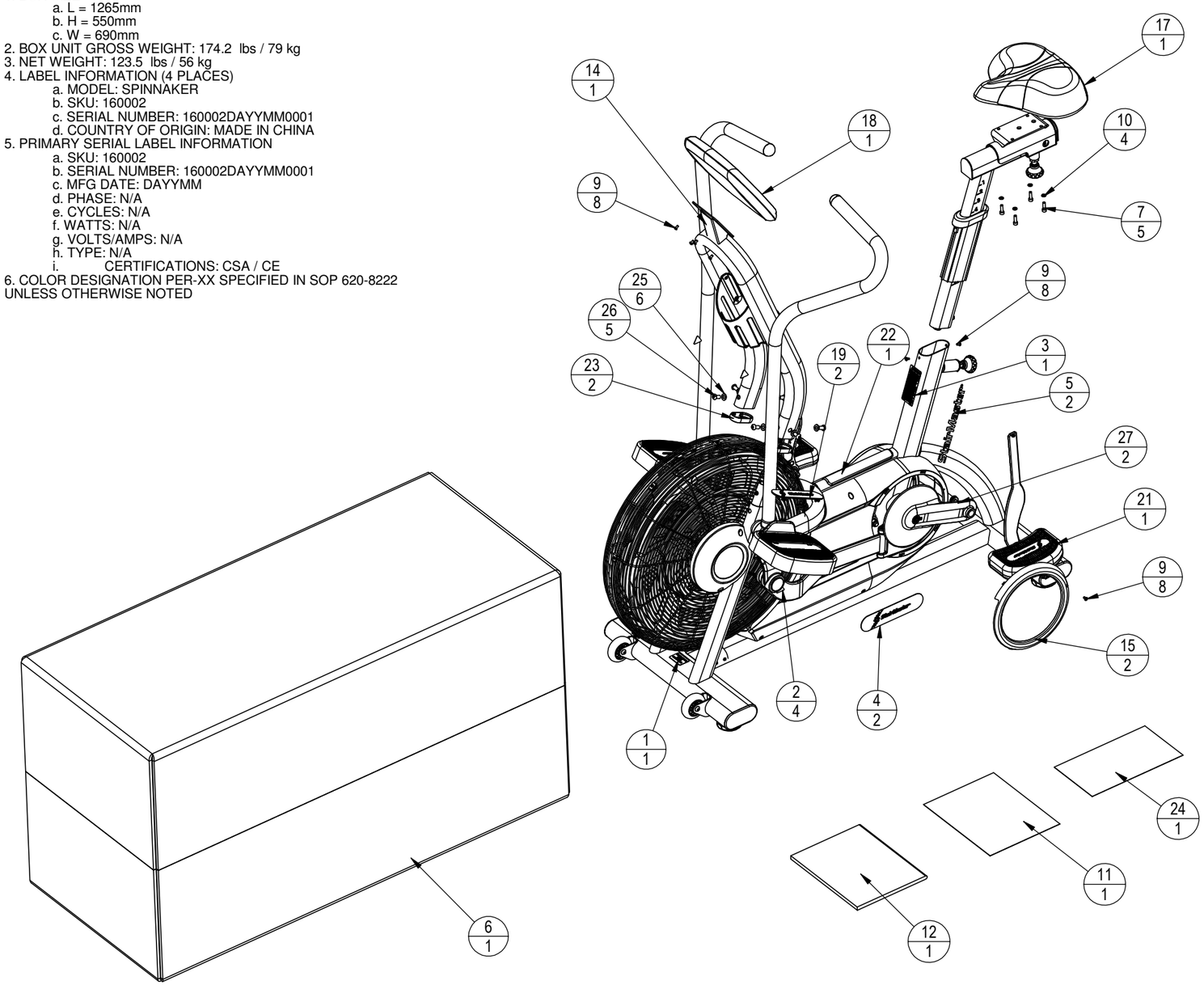

ITEM NO.	PART NUMBER	COLOR DESIGNATOR	DESCRIPTION	QTY.	NOTES
1	000-0120		STICKER, SERIAL NUMBER, ACPV2	1	
2	050-2142		LABEL, WARNING, PINCH POINT, ICON	4	
3	050-2215		LABEL, GENERAL WARNING, E-BTS	1	
4	050-2303		STICKER, Stairmaster, DECO, 45mm X 191mm	2	
5	050-2322		Logo, StairMaster, Down Tube	2	
6	050-2325		Box, Packaging, StairMaster SCREW, M6x20,	1	
~~7~~	~~110-3171~~		~~SHC, HE, ISO4762~~	~~5~~	REF
8	110-3580		SCREW, M8 X 12MM, HSBS	1	
~~9~~	~~110-3581~~		~~SCREW, 4.2M X 8, BHC, PH~~	~~8~~	REF
~~10~~	~~120-3257~~		~~WASHER, M6, TEETH, 0.6 THICK~~	~~4~~	REF
11	620-8243		D0C.,WARRANTY,AIR FIT, StairMaster	1	
12	620-8245		MANUAL, OWNERS, AIR FIT	1	
13	718-5376-XX	31	Assy, Seat, AirBike	1	
14	718-5385-XX	31	Assy, Display base, Airbike	1	
15	718-5487-XX	51	SHROUD, CRANK RING	2	
16	718-5489-XX	31	BASE, ASSY	1	
17	718-5497		SADDLE, STAIRMASTER,	1	
18	718-5499-XX	31	DISPLAY, AIR FIT	1	
19	718-5500		INSERT, SUPPORT FOOT, SM LOGO	2	
20	718-5504		ASSY, PEDAL W/ STRAP, R, TAPER, SM, AIR	1	
21	718-5505		ASSY, PEDAL W/ STRAP, L,STAIRMASTER	1	
22	718-5519-XX	36	STEP, COVER, TUBE, AIR FIT	1	
~~23~~	~~718-5520-xx~~	~~44~~	~~RING, BEAUTY, RAIL SPACER~~	~~2~~	REF
24	718-5521		KIT, HARDWARE, FAN BIKE	1	
~~25~~	~~731-0355~~		~~WASHER,PLAIN,M8,NARROW~~	~~6~~	REF
~~26~~	~~731-5162~~		~~SCREW,M8 X 1.25,16MM,BHC,HK,CS,NP~~	~~5~~	REF
27	740-8145		BOLT, CRANKARM, M8	2	

DOCUMENT STATUS:

NOTICE OF PROPRIETARY INFORMATION

THIS DOCUMENT SHALL NOT BE REPRODUCED NOR SHALL THE INFORMATION CONTAINED HEREIN BE USED BY OR DISCLOSED TO OTHER EXCEPT AS EXPRESSLY AUTHORIZED BY CORE HEALTH & FITNESS, LLC.

CLASS OF WORK		UNLESS OTHERWISE SPECIFIED DIMS ARE IN mm. TOLERANCES FOR MEASURE OF LENGTH ARE:							ANGLES = ±2°
		0.5 to 3	> 3 to 6	> 6 to 30	> 30 to 120	> 120 to 400	> 400 to 1000	> 1000 to 2000	> 2000
FINE		±0.05	±0.05	±0.1	±0.15	±0.2	±0.3	±0.5	-----
MEDIUM	X	±0.1	±0.1	±0.2	±0.3	±0.5	±0.8	±1.2	±2
COARSE		±0.2	±0.3	±0.5	±0.8	±1.2	±2	±3	±4
VERY COARSE		-----	±0.5	±1	±1.5	±2.5	±4	±6	±8

MATERIAL

FINISH
SEE BOM

VENDOR: P/N:

THIRD ANGLE PROJECTION

	INITIAL	DATE
DRAWN	VC	
CHECKED		
APPROVED		
	U.O.M.	MM

CORE HEALTH & FITNESS, LLC
4400 NE 77th Ave., Suite 300
Vancouver, WA 98662

CORE PART NO **160002** REV **A**

TITLE
BIKE, AIR FIT, STAIRMASTER

SCALE: 1:20 | SHEET 1 OF 1 | SHEET SIZE: B

NOTES:

1. COLOR DESIGNATION PER-XX SPECIFIED IN SOP 620-8222 UNLESS OTHERWISE NOTED
2. APPLY LOCTITE 243
3. TORQUE TO 3 Nm / 26.5 Lb-in
4. TORQUE TO 7Nn / 62 Lb-in

REVISION HISTORY				
REV	DATE	DESCRIPTION	ECO	BY
A	12/19/2013	PRODUCTION RELEASE	14455	VC

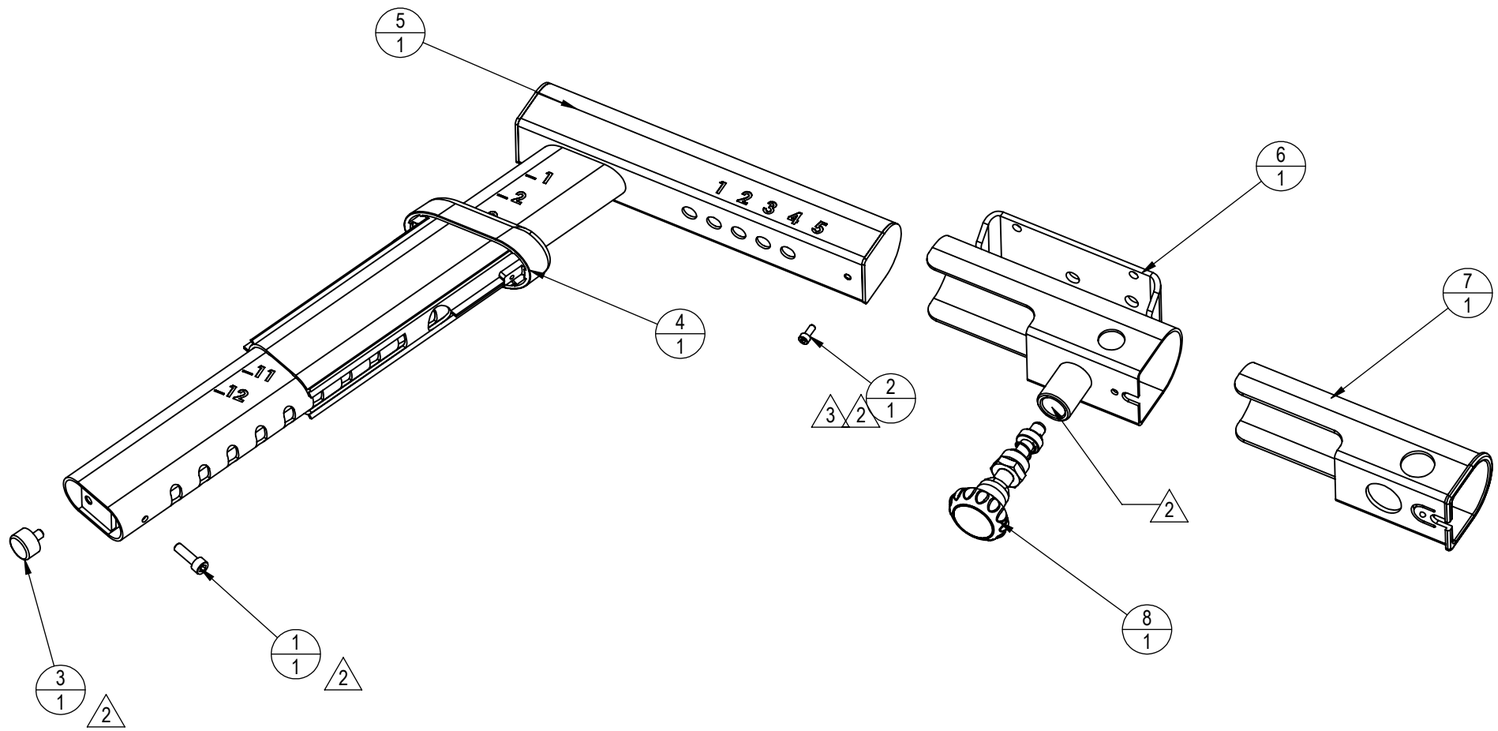

ITEM NO.	PART NUMBER	DESCRIPTION	QTY.
1	110-3171	SCREW, M6x20, SHC, HE, ISO4762	1
2	110-3357	SCREW, M4 X10, SHC, HK, CS, BO, NP	1
3	140-3240	BUMPER, 3/4x7/16x8-32, RUBBER	1
4	718-5381-35	SLEEVE, SEAT POST, SPORT, AIRBIKE	1
5	718-5404	WELDMENT, SEAT POST	1
6	718-5409	WELDMENT, SEAT BASE	1
7	718-5413	INSERT, SEAT, SLIDER	1
8	718-5497	ASSY, POP PIN	1

DOCUMENT STATUS:

NOTICE OF PROPRIETARY INFORMATION

THIS DOCUMENT SHALL NOT BE REPRODUCED NOR SHALL THE INFORMATION CONTAINED HEREIN BE USED BY OR DISCLOSED TO OTHER EXCEPT AS EXPRESSLY AUTHORIZED BY CORE HEALTH & FITNESS, LLC.

CLASS OF WORK		UNLESS OTHERWISE SPECIFIED DIMS ARE IN mm. TOLERANCES FOR MEASURE OF LENGTH ARE: 0.5 to 3	> 3 to 6	> 6 to 30	> 30 to 120	> 120 to 400	> 400 to 1000	> 1000 to 2000	> 2000	ANGLES = ±2°
FINE		±0.05	±0.05	±0.1	±0.15	±0.2	±0.3	±0.5	-----	
MEDIUM	X	±0.1	±0.1	±0.2	±0.3	±0.5	±0.8	±1.2	±2	
COARSE		±0.2	±0.3	±0.5	±0.8	±1.2	±2	±3	±4	
VERY COARSE		-----	±0.5	±1	±1.5	±2.5	±4	±6	±8	

MATERIAL
SEE NOTES

FINISH

VENDOR: P/N:

THIRD ANGLE PROJECTION

	INITIAL	DATE
DRAWN	VC	
CHECKED		
APPROVED		
	U.O.M.	MM

CORE HEALTH & FITNESS, LLC
4400 NE 77th Ave., Suite 300
Vancouver, WA 98662

CORE PART NO: **718-5376-XX** REV: **A**

TITLE: ASSY, SEAT, FAN, BIKE

SCALE: 1:10 | SHEET 1 OF 1 | SHEET SIZE: B

NOTES:
1. COLOR DESIGNATION PER-XX SPECIFIED IN SOP 620-8222
   UNLESS OTHERWISE NOTED

REVISION HISTORY				
REV	DATE	DESCRIPTION	ECO	BY
A	12/19/2013	PRODUCTION RELEASE	14455	VC

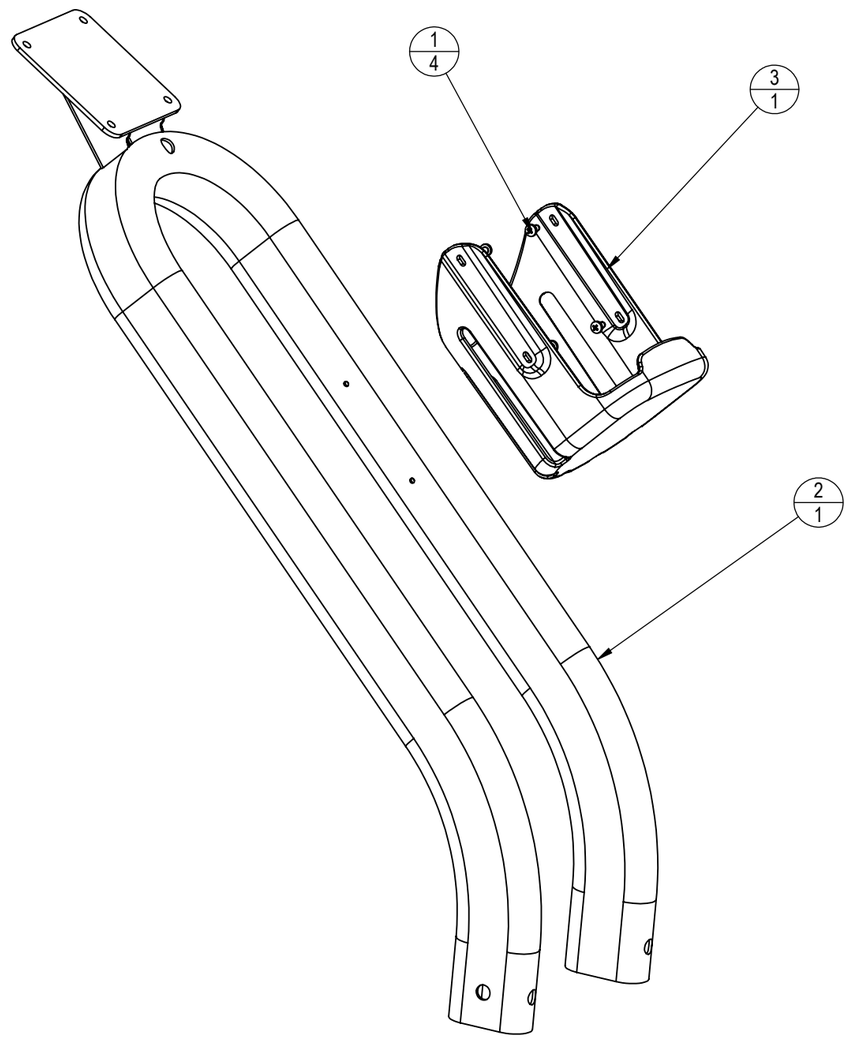

ITEM NO.	PART NUMBER	DESCRIPTION	QTY.
1	110-3581	SCREW, 4.2M X 8, BHC, PH	4
2	718-5455-51	ASSY, WELD, DISPLAY	1
3	718-5495	Holder, Water bottle	1

DOCUMENT STATUS:

NOTICE OF PROPRIETARY INFORMATION

THIS DOCUMENT SHALL NOT BE REPRODUCED NOR SHALL THE INFORMATION CONTAINED HEREIN BE USED BY OR DISCLOSED TO OTHER EXCEPT AS EXPRESSLY AUTHORIZED BY CORE HEALTH & FITNESS, LLC.

CLASS OF WORK		UNLESS OTHERWISE SPECIFIED DIMS ARE IN mm. TOLERANCES FOR MEASURE OF LENGTH ARE:							ANGLES = ±2°
		0.5 to 3	> 3 to 6	> 6 to 30	> 30 to 120	> 120 to 400	> 400 to 1000	> 1000 to 2000	> 2000
FINE		±0.05	±0.05	±0.1	±0.15	±0.2	±0.3	±0.5	-----
MEDIUM	X	±0.1	±0.1	±0.2	±0.3	±0.5	±0.8	±1.2	±2
COARSE		±0.2	±0.3	±0.5	±0.8	±1.2	±2	±3	±4
VERY COARSE		-----	±0.5	±1	±1.5	±2.5	±4	±6	±8

MATERIAL

FINISH

VENDOR: P/N:

THIRD ANGLE PROJECTION

	INITIAL	DATE
DRAWN	VC	
CHECKED		
APPROVED		
	U.O.M.	MM

CORE HEALTH & FITNESS, LLC
4400 NE 77th Ave., Suite 300
Vancouver, WA 98662

CORE PART NO: 718-5385-31

REV: A

TITLE: Assy, Display base, Airbike

SCALE: 1:20 | SHEET 1 OF 1 | SHEET SIZE: B

NOTES:

1. COLOR DESIGNATION PER-XX SPECIFIED IN SOP 620-8222 UNLESS OTHERWISE NOTED.

REVISION HISTORY

REV	DATE	DESCRIPTION	ECO	BY
A	11/27/2013	PART NUMBER RELEASE	14455	VC

ITEM NO.	PART NUMBER	DESCRIPTION	QTY.	NOTES
1	110-3396	SCREW, #8-18, 1-3/4,PHT-A ,PH, CS	5	
2	110-3500	WASHER,M3,PLAIN	4	
~~3~~	~~110-3580~~	~~SCREW, M8 X 12MM, HSBS~~	~~12~~	REF
~~4~~	~~110-3584~~	~~SCREW, SHOULDER, Ø8mm ,16mm, SHC, SS~~	~~4~~	REF
5	120-3340	SPACER, KEY 5mm, Ø17mm X Ø32mm X 4mm	1	
6	130-1811	PULLEY, J6, POLY-V, Ø122.5mm BP, OFF-SET, Ø195mm	1	
7	130-1812	BELT, 6PK910, POLY-V	1	
8	130-1814	BELT, 6J460, POLY-V	1	
9	140-3542	KEY, PARALLEL, 5mm X 5mm X 10mm	2	
10	140-3554	Retaining, Round Wire, 50 OD X 2.5	2	
11	140-3555	Retaining, Round Wire, 38 OD X 2.5	2	
12	718-5277	NUT, AXLE, B/B, E-/S- BIKE, GEN 2	1	
13	718-5375-51	WELDMENT, FRAME	1	
14	718-5378	ASSY, BOTTOM BACKET	1	
15	718-5379	ASSY, SEAT STOP PIN, AirBike	1	
16	718-5380-31	HANDLEBAR, UB, RIGHT	1	
17	718-5382-31	ASS, CRANK ARM, RIGHT	1	
18	718-5383-31	Assy, Crank Arm, Left, AirBike	1	
19	718-5384-31	ASSY, HANDLEBAR, UB, LEFT	1	
20	718-5386-31	ASSY, GRID, FAN	1	
21	718-5387	ASSY, TENSIONER, MAIN	1	
22	718-5419	SHAFT, TRANS	1	
23	718-5420	PULLEY, K6, POLY-V,	1	
24	718-5422	Ø60mm SPACER, TRANS,	1	
25	718-5431	TURBO BB spacer	1	
26	718-5439-36	LINK, UPPER BODY, LEFT	1	
27	718-5445-36	LINK, UPPER BODY, RIGHT	1	

ITEM NO.	PART NUMBER	DESCRIPTION	QTY.	NOTES
28	718-5448-50	COVER, AXEL, FAN	2	
29	718-5474	PLATE, BRACE, FAN	1	
30	718-5475	BRACKET, FAN,LEFT	1	
31	718-5478	PLATE, BRAKE, FRAME	2	
32	718-5479	SUPPORT, FOOT	2	
33	718-5485-50	SHROUD, RIGHT	1	
34	718-5486-50	SHROUD, LEFT	1	
35	718-5508	ADAPTER, PULLEY, TRANS	1	
36	731-0225	SCREW,M3.5 X 9.5,SELF TAPPING	4	
37	731-0353	SCREW,M5X0.8,12mm,BHC,HK	8	
~~38~~	~~731-0355~~	~~WASHER,PLAIN,M8,NARROW~~	~~8~~	REF
39	731-0373	WASHER,PLAIN,M6	2	
~~40~~	~~731-0570~~	~~SCREW,M8 X1.25,16mm,SHC,HK~~	~~2~~	REF
41	731-0824	RADIAL BEARING,17 ID X 35 ODX 10MM	2	
~~42~~	~~731-1222~~	~~WASHER, 25OD X 8.5ID X 3T~~	~~2~~	REF
43	731-5810	WASHER,M5,PLAIN	10	
44	740-4517	SCREW,4.2M X 22,BHC,PH	1	
45	740-7186	SCREW, M5X0.8X12, BHC, HE, SS	6	
46	740-7187	SCREW, M6X1.25X10, BHC, HE, SS	4	
47	740-7190	NUT, M12X1.25, FLANGE, HE, CS, BO	2	
48	740-7553	BEARING, 6005 SERIES, 25x47x12, 2RS	2	
49	740-7558	END CAP, STABILIZER	4	
50	740-7656	LEVELLING FEET	4	
~~51~~	~~740-7850~~	~~CAP, PLUG, 38mm OD, E-CT~~	~~2~~	REF
52	740-8006	WHEEL, FRONT FOOT	2	
53	740-8007	BOLT, WHEEL	2	
54	740-8145	BOLT, CRANKARM, M8	2	
55	740-7916	M5 X 16MM, DOWEL PIN	2	

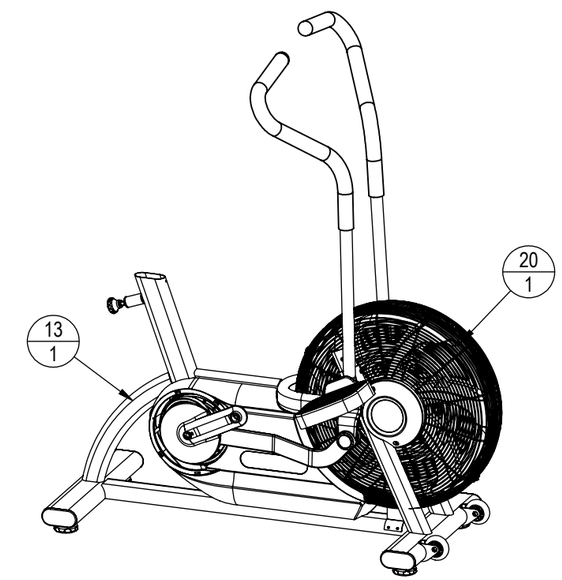

DOCUMENT STATUS:

NOTICE OF PROPRIETARY INFORMATION

THIS DOCUMENT SHALL NOT BE REPRODUCED NOR SHALL THE INFORMATION CONTAINED HEREIN BE USED BY OR DISCLOSED TO OTHER EXCEPT AS EXPRESSLY AUTHORIZED BY CORE HEALTH & FITNESS, LLC.

CLASS OF WORK		UNLESS OTHERWISE SPECIFIED DIMS ARE IN mm. TOLERANCES FOR MEASURE OF LENGTH ARE: 0.5 to 3	> 3 to 6	> 6 to 30	> 30 to 120	> 120 to 400	> 400 to 1000	> 1000 to 2000	> 2000
		ANGLES = ±2°							
FINE		±0.05	±0.05	±0.1	±0.15	±0.2	±0.3	±0.5	-----
MEDIUM	X	±0.1	±0.1	±0.2	±0.3	±0.5	±0.8	±1.2	±2
COARSE		±0.2	±0.3	±0.5	±0.8	±1.2	±2	±3	±4
VERY COARSE		-----	±0.5	±1	±1.5	±2.5	±4	±6	±8

MATERIAL
SEE BOM

FINISH
SEE NOTES

VENDOR: P/N:

THIRD ANGLE PROJECTION

	INITIAL	DATE
DRAWN	VC	10/10/2013
CHECKED		
APPROVED		
	U.O.M.	MM

CORE HEALTH & FITNESS, LLC
4400 NE 77th Ave., Suite 300
Vancouver, WA 98662

CORE PART NO: 718-5489-XX
REV: A

TITLE: BASE, ASSY, FAN, BIKE

SCALE: 1:1 | SHEET 1 OF 6 | SHEET SIZE: B

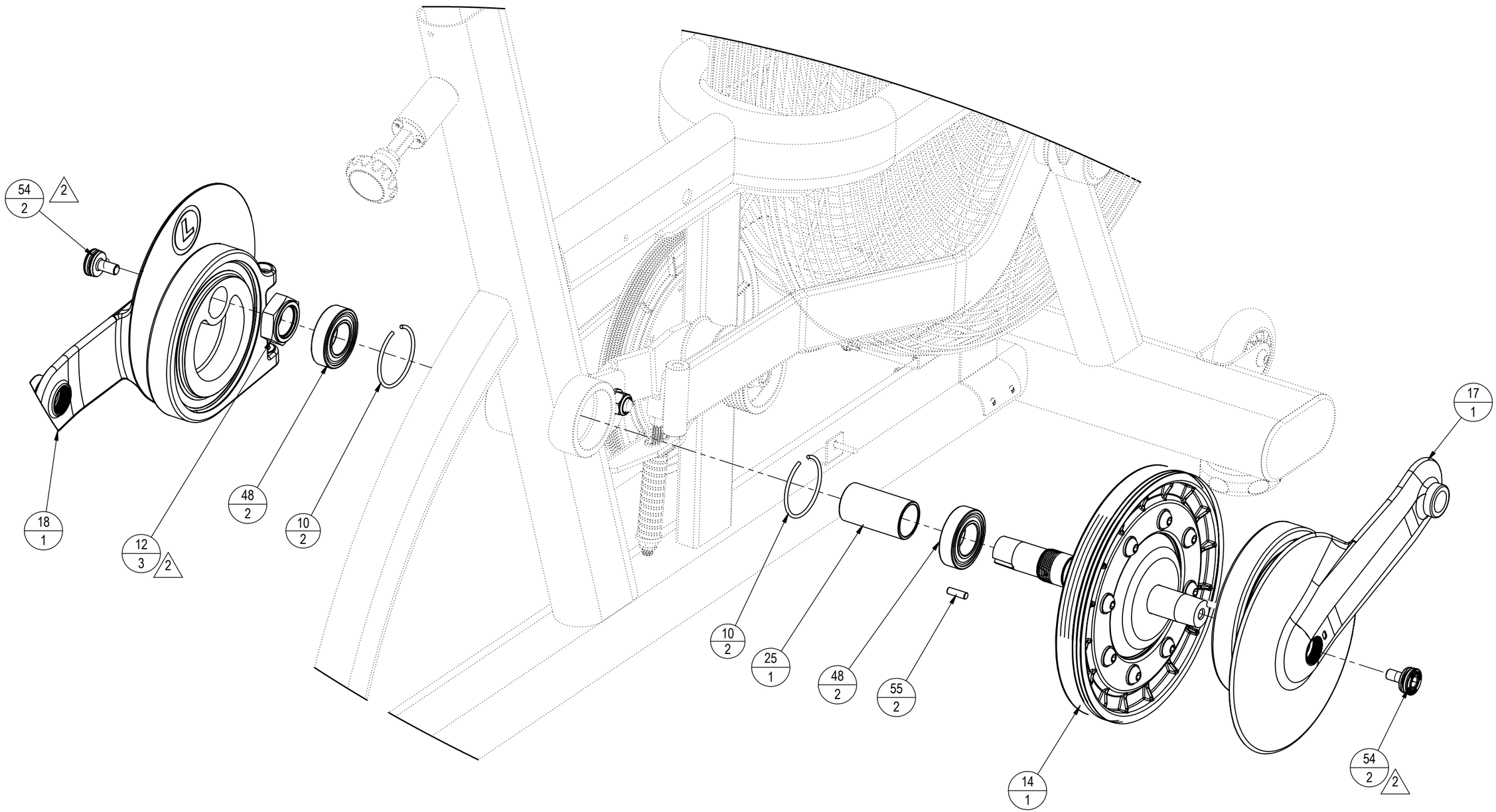

NOTE: CONT.

2. TORQUE TO 45-50 Nn / 33-37 Lb-ft.

BOTTOM BRACKET ASSY

CORE HEALTH & FITNESS, LLC
4400 NE 77th Ave., Suite 300
Vancouver, WA 98662

CORE PART NO	REV
718-5489-XX	**A**

TITLE
BASE, ASSY, FAN, BIKE

SCALE: 1:1	SHEET 2 OF 6	SHEET SIZE: B

IDLER PULLEY TENSIONER ASSY

NOTE: CONT.
3. TORQUE TO 63 Nm / 46.5 Lb-ft
4. TORQUE TO 6.2 Nn / 55 Lb-In
5. APPLY LOCTITE 243

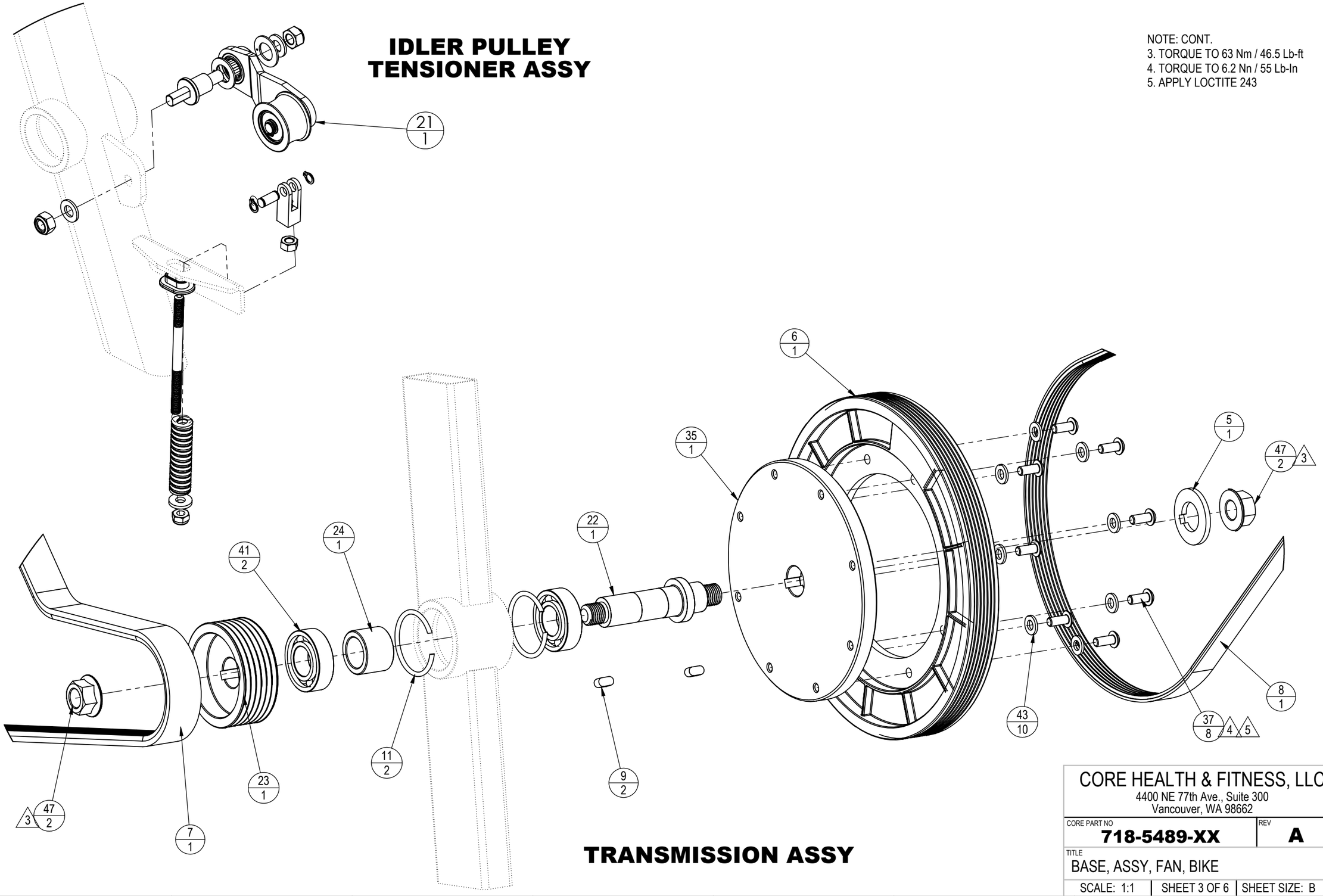

TRANSMISSION ASSY

CORE HEALTH & FITNESS, LLC
4400 NE 77th Ave., Suite 300
Vancouver, WA 98662

CORE PART NO	REV
718-5489-XX	A

TITLE
BASE, ASSY, FAN, BIKE

SCALE: 1:1 | SHEET 3 OF 6 | SHEET SIZE: B

NOTE: CONT.

6. TORQUE TO 12 Nn / 106 Lb-in
7. TORQUE TO 25 Nn / 221 Lb-in

UPPER BODY - LINKAGE ASSY.

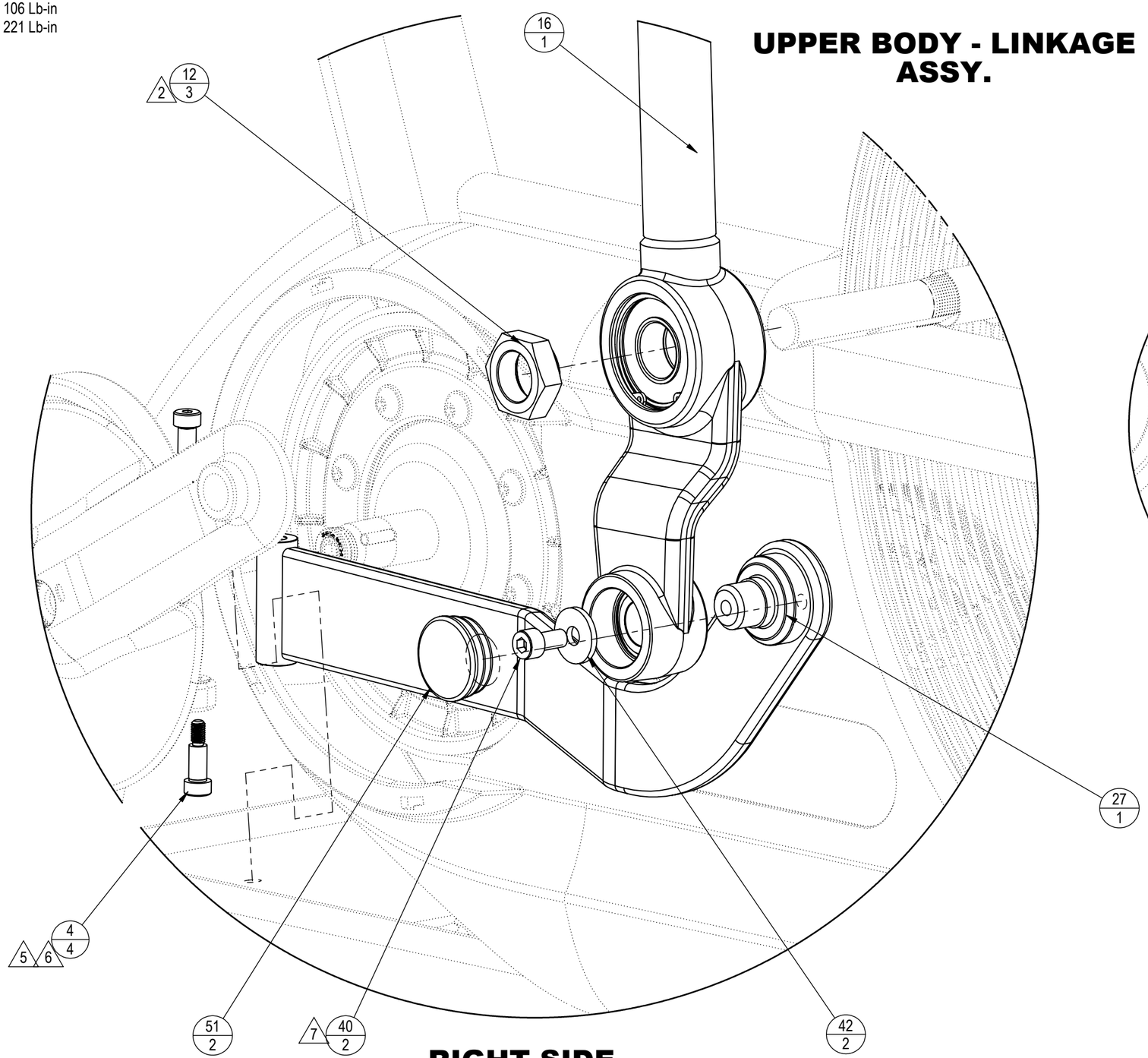

RIGHT SIDE

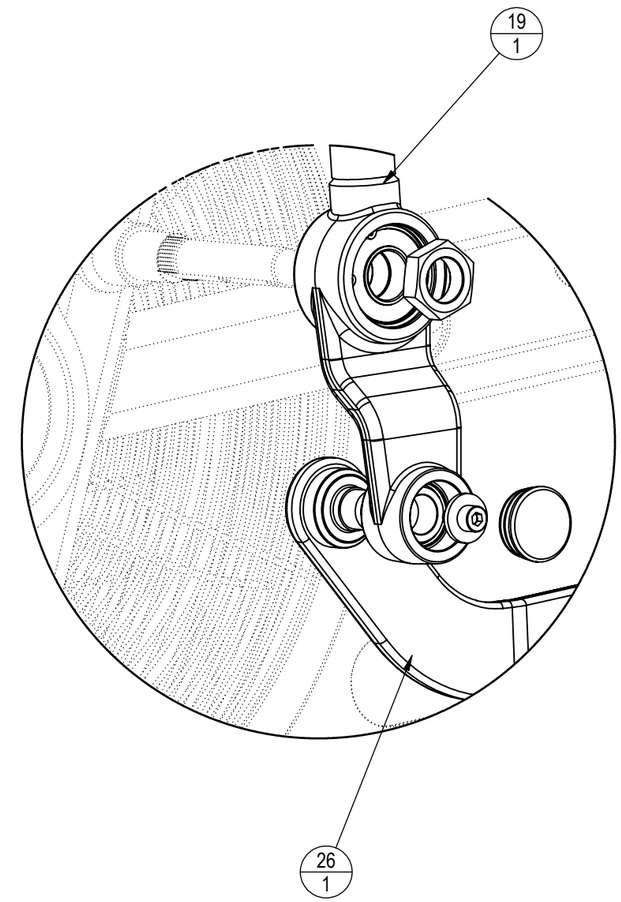

LEFT SIDE

CORE HEALTH & FITNESS, LLC
4400 NE 77th Ave., Suite 300
Vancouver, WA 98662

CORE PART NO	REV
718-5489-XX	A

TITLE
BASE, ASSY, FAN, BIKE

SCALE: 1:1 | SHEET 4 OF 6 | SHEET SIZE: B

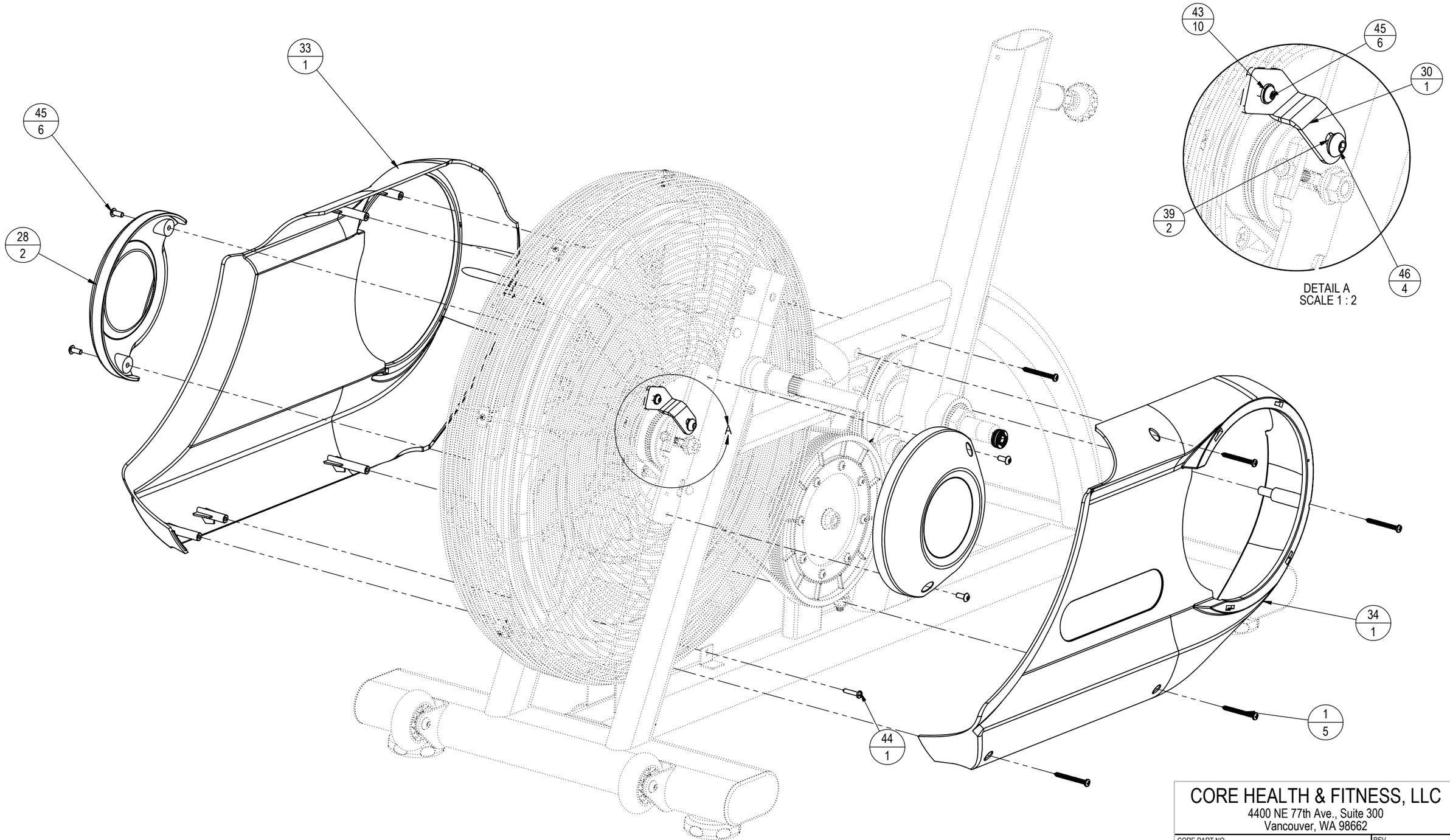

SHROUD ASSY

CORE HEALTH & FITNESS, LLC
4400 NE 77th Ave., Suite 300
Vancouver, WA 98662

CORE PART NO	REV
718-5489-XX	**A**

TITLE
BASE, ASSY, FAN, BIKE

SCALE: 1:1	SHEET 5 OF 6	SHEET SIZE: B

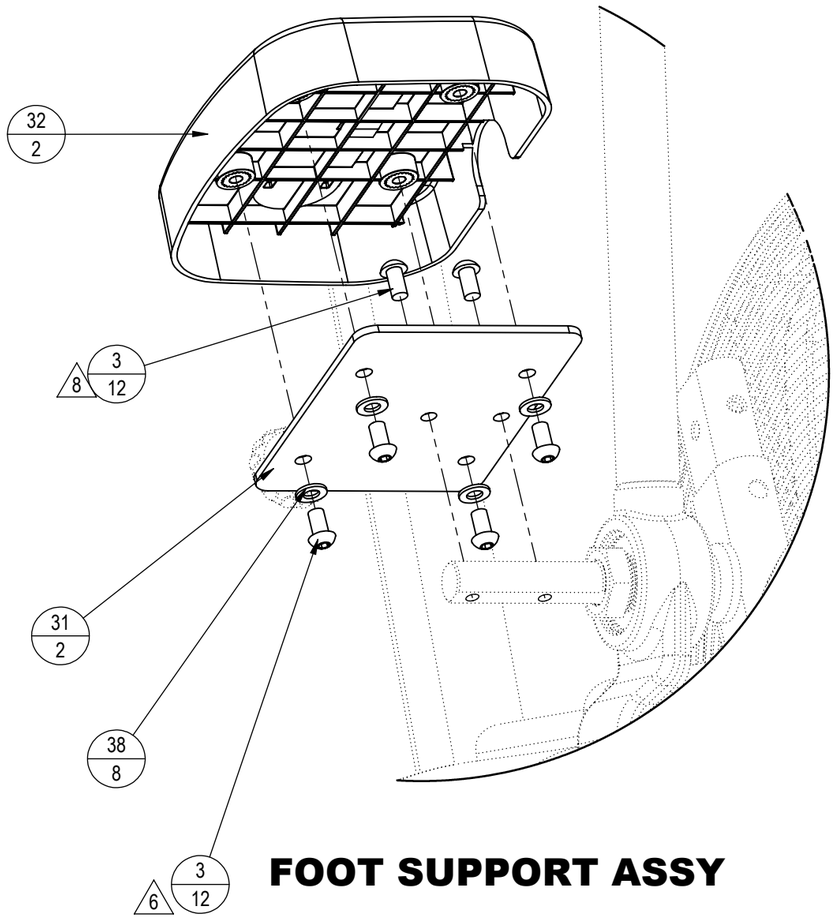

FOOT SUPPORT ASSY

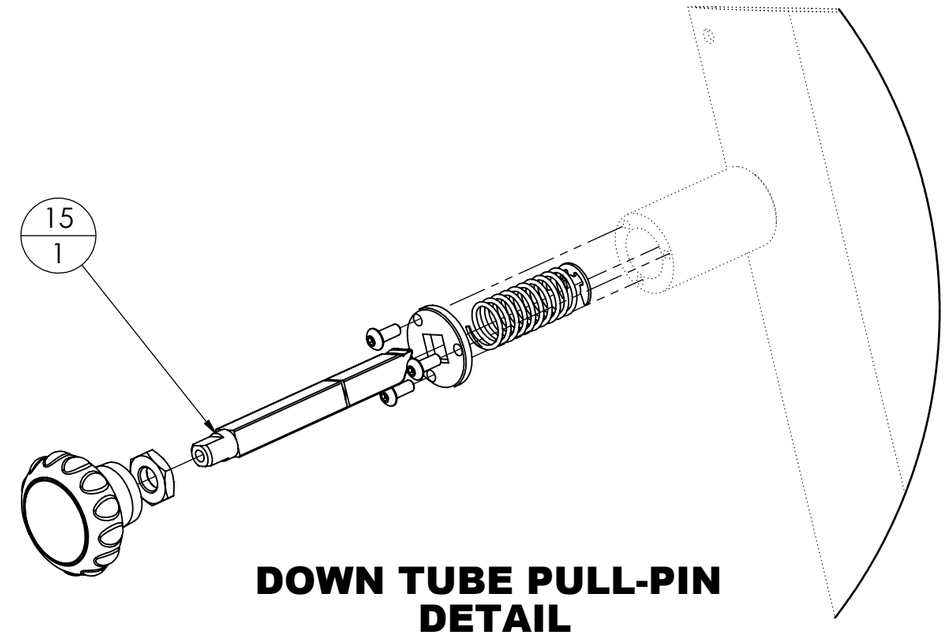

DOWN TUBE PULL-PIN DETAIL

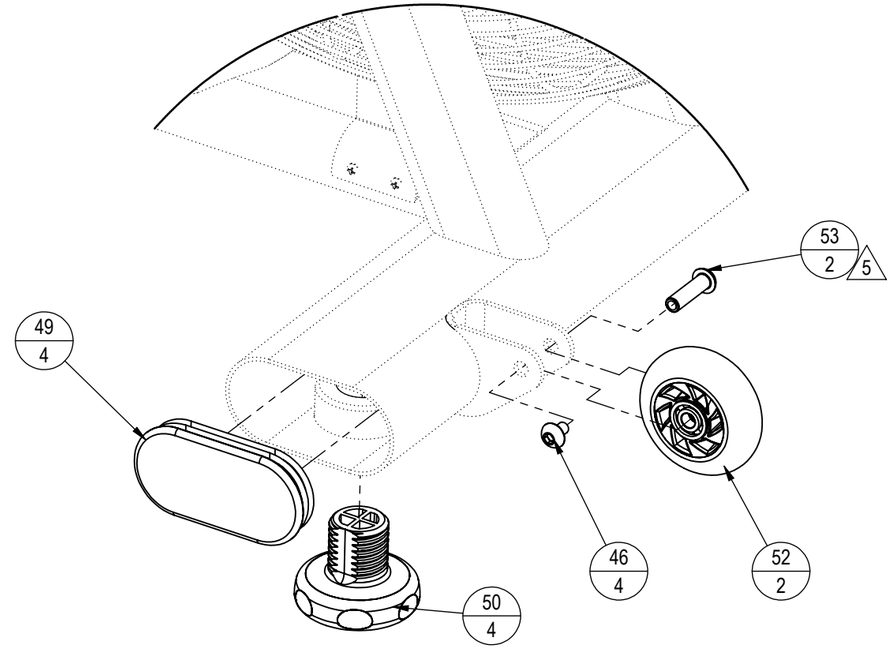

ENDCAP, ADJ FEET, WHEELS DETAIL VIEW

NOTE: CONT.

8. TORQUE TO 17 Nn / 150 Lb-in

CORE HEALTH & FITNESS, LLC
4400 NE 77th Ave., Suite 300
Vancouver, WA 98662

CORE PART NO	REV
718-5489-XX	A

TITLE
BASE, ASSY, FAN, BIKE

SCALE: 1:1	SHEET 6 OF 6	SHEET SIZE: B

NOTE:
1. COLOR DESIGNATION PER-XX SPECIFIED IN SOP 620-8222 UNLESS OTHERWISE NOTED
2. EVENLY SPACE AROUND GRILL

REVISION HISTORY				
REV	DATE	DESCRIPTION	ECO	BY
A	12/19/2013	PRODUCTION RELEASE	14455	VC

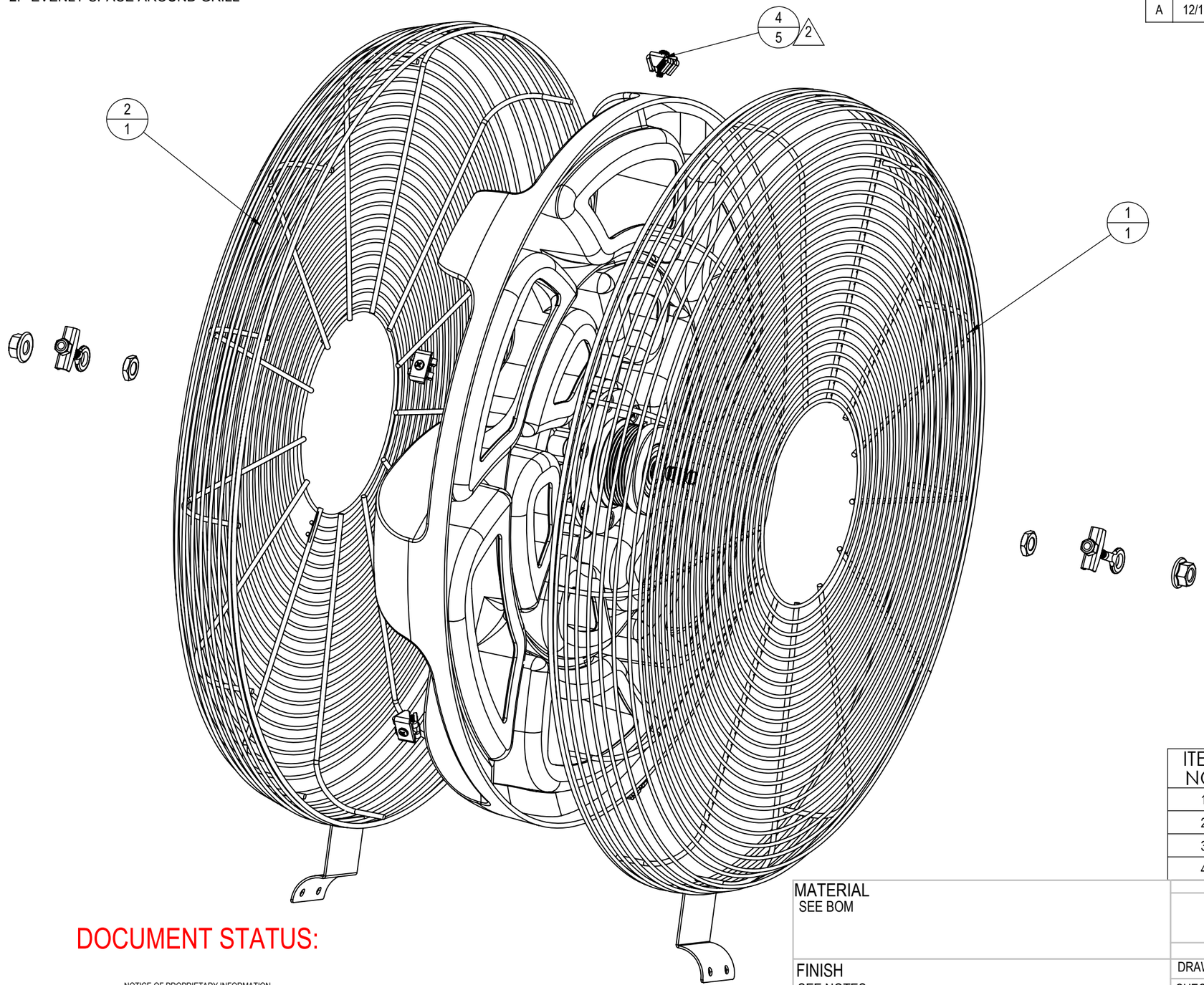

ITEM NO.	PART NUMBER	DESCRIPTION	QTY.
1	718-5460-51	GUARD, FAN, LEFT	1
2	718-5461-51	GUARD, FAN, RIGHT	1
3	718-5466-31	ASSY, FAN	1
4	718-5465-31	KIT,TENSION, GRID, FAN	5

DOCUMENT STATUS:

NOTICE OF PROPRIETARY INFORMATION

THIS DOCUMENT SHALL NOT BE REPRODUCED NOR SHALL THE INFORMATION CONTAINED HEREIN BE USED BY OR DISCLOSED TO OTHER EXCEPT AS EXPRESSLY AUTHORIZED BY CORE HEALTH & FITNESS, LLC.

MATERIAL
SEE BOM

FINISH
SEE NOTES

VENDOR: P/N:

THIRD ANGLE PROJECTION

	INITIAL	DATE
DRAWN	VC	10/10/2013
CHECKED		
APPROVED		
	U.O.M.	MM

CORE HEALTH & FITNESS, LLC
4400 NE 77th Ave., Suite 300
Vancouver, WA 98662

CORE PART NO: 718-5386-XX
REV: A

TITLE: ASSY, GRID, FAN,AIR FIT

SCALE: 1:10 | SHEET 1 OF 1 | SHEET SIZE: B